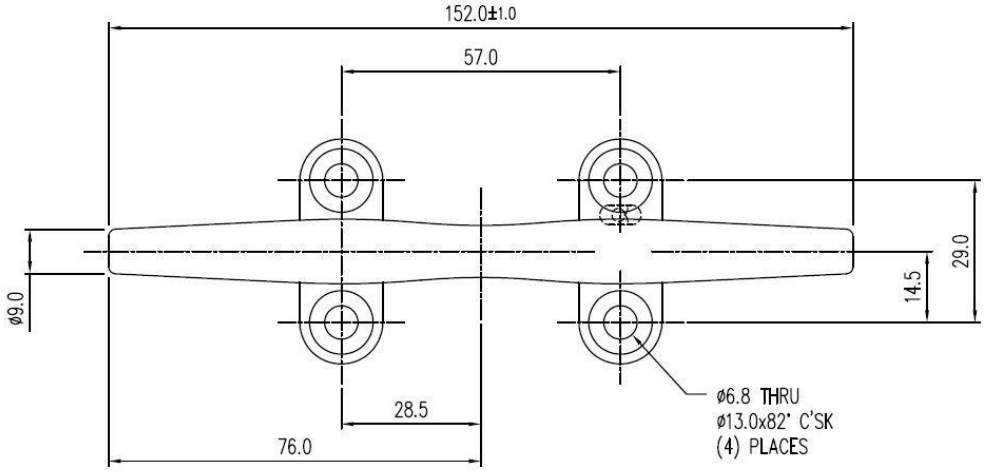
152.0±1.0
57.0
29.0
14.5
ø9.0
28.5
76.0
ø6.8 THRU
ø13.0x82° C'SK
(4) PLACES

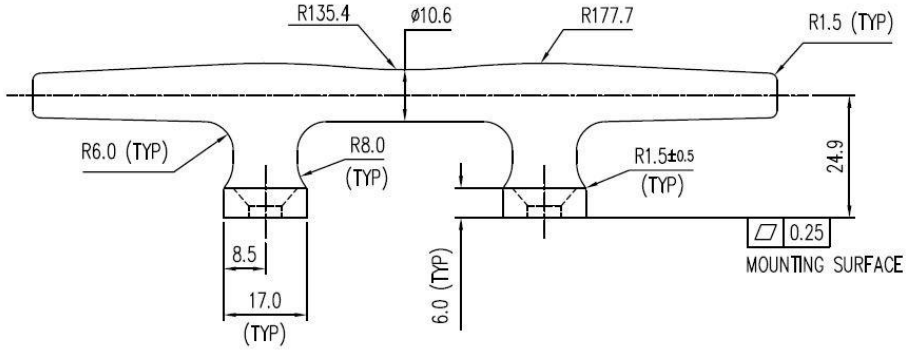
R135.4
ø10.6
R177.7
R1.5 (TYP)
R6.0 (TYP)
R8.0
(TYP)
R1.5±0.5
(TYP)
24.9
0.25
MOUNTING SURFACE
8.5
17.0
(TYP)
6.0 (TYP)

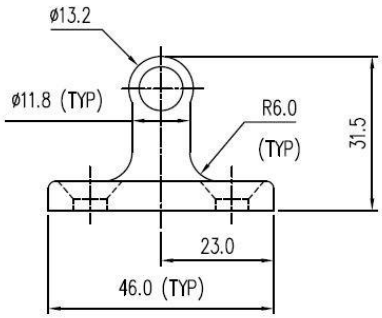
ø13.2
ø11.8 (TYP)
R6.0
(TYP)
31.5
23.0
46.0 (TYP)